COMPIT · COMPIT+ · COMPIT/STEM · COMPIT/STEM+

Instruction Manual - Version 10.2021

Table of Contents

Table of contents	3
Notes on the manual and the manufacturer	4
Keeping this manual available	4
Design features of this manual	4
Copyright	5
Manufacturer's address	5
Safety instructions	6
Basic safety instructions	7
Design Features of Warnings	8
Design Features of Property Damage	8
Design features of tips	8
Scope of delivery	9
COMPIT	9
COMPIT+	11
COMPIT STEM	12
COMPIT STEM+	13
COM/UNIT	13
Mounting options	14
Assembly	16
COMPIT & COMPIT+	17
COMPIT 35mm	20
COMPIT Widening	21
COMPIT STEM	23
COMPIT STEM+	24
Accessories	25
Task and function	26
COMPIT	26
COMPIT+ & COM/UNIT	26
COMPIT STEM	26
COMPIT STEM+	26
COMPIT SPACER	27
Technical data COM/UNIT	27
LED status display	28
Unpacking and checking the scope of delivery	28
Attaching and removing COMPIT to bike handlebars	29
Attaching and removing smartphone to COMPIT	29
Adjusting the inclination	31
Maintaining the product	32
Accessories	32
Disposing of the product	33
Warranty Statement	34
Returning the product to customer service	35

Information about the manual and the manufacturer

This manual will help you to safely use the COMPIT and COMPIT+ as well as the COMPIT STEM and COMPIT STEM+ product family. The COMPIT is a smartphone holder for smartphones. The COMPIT+ consists of a COMPIT and COM/UNIT. The +COM/UNIT is a power bank for smartphones. The COMPIT and the +COM/UNIT are all referred to hereinafter as the "product" for short, unless a distinction needs to be made between the different functions of the products.
The +COMPIT STEM smartphone holder mounts the smartphone under the ahead cap on the handlebar stem.
The COMPIT STEM+ combines the smartphone holder with the +COM/UNIT.

Keep the manual to hand

➤ This manual is part of the product.
➤ Always retain this manual.
➤ Hand over this manual if you sell the product or pass it on in any other way.

Features of this manual

Various elements of this manual have defined features.
This allows you to easily distinguish between the following elements:
Normal text
● Lists
➤ Action steps

Copyright

This manual contains information that is subject to copyright. This manual may not be copied, printed, filmed, processed, reproduced or distributed in any form, in whole or in part, without the prior written consent of SKS metaplast Scheffer-Klute GmbH.
©2019 SKS metaplast Scheffer-Klute GmbH
All rights reserved.

Manufacturer's address

SKS metaplast Scheffer-Klute GmbH
Zur Huberstushalle 4
59846 Sundern / Germany
Tel.: +49-2933-8310
Website: www.sks-germany.com

Safety

Intended use
The product is designed for private use.
The COMPIT is used for mounting a smartphone on the handlebar of a bike.
It is intended for a handlebar with the following diameters.

- 22.2 mm
- 25.4 mm
- 31.8 mm
- 35 mm

The stem width is a maximum of 80 mm (see page 21).

The +COM/UNIT is additionally included in the scope of delivery for the COMPIT+.

The +COM/UNIT is intended for charging a smartphone and can be mounted on the COMPIT.
The smartphone can only be used on the COMPIT and the +COM/UNIT with a COVER, COVER ADAPTER or special bag not included in the scope of delivery. Please refer to the Accessories section, page 32. Intended use also includes observing and following all the information contained in this manual, particularly the safety instructions. Any other use is expressly considered improper use.

COMPIT STEM & COMPIT STEM+
➤ There may be an overhang in the knee area depending on the mounting option.
Attention: risk of falling!
➤ The product should only be mounted by a technically adept person.
If necessary, contact your bicycle dealer or the SKS GERMANY customer service team.

Basic safety instructions

Avoid fire, explosion or electric shock

Severe or fatal injuries caused by explosion, fire or electric shock may be caused if the product is used improperly.

- Check whether the voltage indicated on the power adapter is the same as the local mains voltage before connecting the adapter to the power supply.
- Only use authorised power adapters.
- Do not use the power adapter, COMPIT or +COM/UNIT if they are damaged.
- Never open the housing of the +COM/UNIT. Always have repair work carried out by qualified specialists.
- Do not stick metal labels or other objects onto the +COM/UNIT.
- Do not use the +COM/UNIT in the vicinity of heated surfaces.
- Do not use extension cables or overloaded multi-way sockets.
- Ensure that children and persons with reduced mental capabilities only use the +COM/UNIT when supervised.

Avoid failure of a pacemaker or another implant

The use of the +COM/UNIT can lead to the failure of a pacemaker or another implant.

- If you have a pacemaker or another implant, consult your doctor or the implant manufacturer before using the +COM/UNIT.

Warnings

CAUTION	
⚠	Warning with the word CAUTION warn of a situation that may result in minor or moderate injuries.

Property damage

ATTENTION	
	This information warns of a situation that will result in property damage and reduced functionality.

Tips

ⓘ Tips contain additional information.

Overview of the scope of delivery for the COMPIT

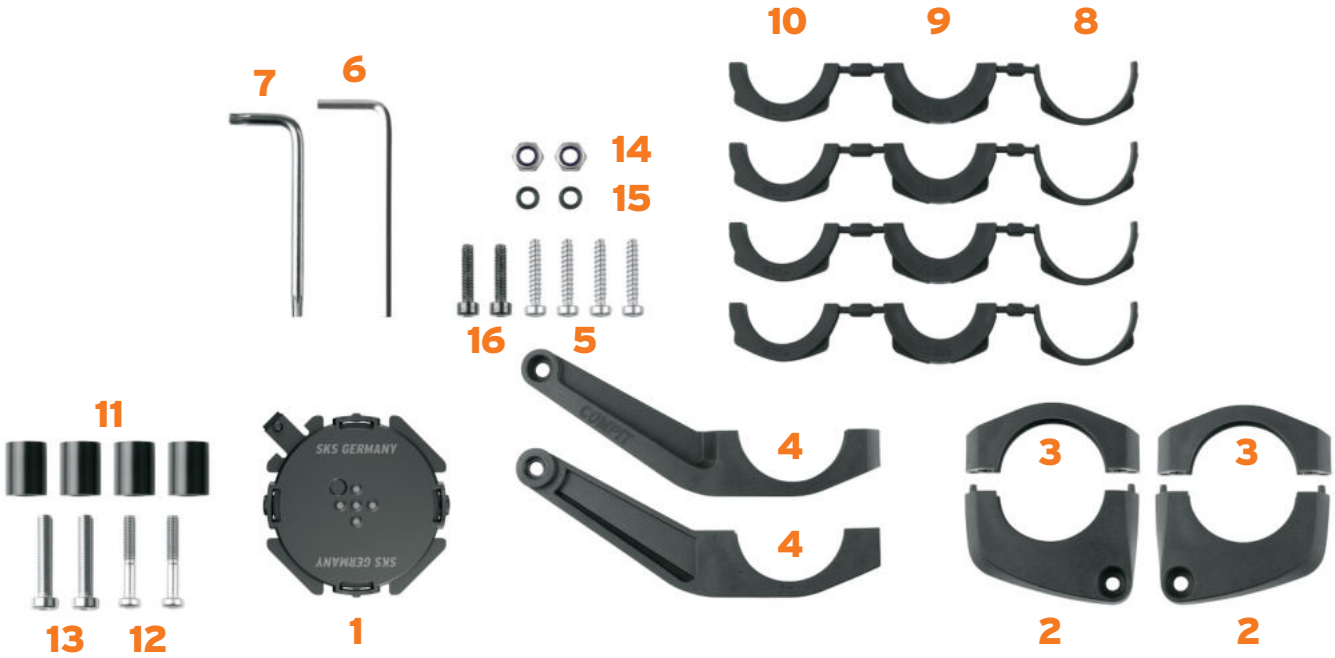

For central displays (Bosch Intuvia)

For a handlebar without a central display

COMPIT 35 mm

No.	DESIGNATION
1	Docking station for mounting the smartphone with a cover or the +COM/UNIT
2	Side panels for the docking station 2x
3	Clamping arms for the COMPIT without an adapter 2x
4	Clamping arms for the COMPIT with an adapter for the Bosch Intuvia (R: right, L: left) 2x
5	Screws for mounting the COMPIT with clamping arms on the handlebar of the bicycle (4x20), 4x

No.	DESIGNATION
6	3 mm Allen key
7	Torx® key Tx20
8	Rubber adapters for a handlebar with a diameter of 31.8 mm, 4x
9	Rubber adapters for a handlebar with a diameter of 22.2 mm, 4x
10	Rubber adapters for a handlebar with a diameter of 25.4 mm, 4x
11	PVC spacers, 4x
12	Screws for the COMPIT spacers for the docking station; (4x25), 2x
13	Screws for the COMPIT spacers for the COM/LIGHT; (5x25), 2x
14	Self locking nuts M4, 2x for the COMPIT adapter
15	O-rings for the docking station, 2x
16	Screws for the docking station; (4x18), 2x
17	Klemmarme COMPIT 35 mm links
18	Klemmarme COMPIT 35 mm rechts
19	Screw M5, 2x
20	Vierkantmutter M5, 2x

Overview of the scope of delivery for the COMPIT+

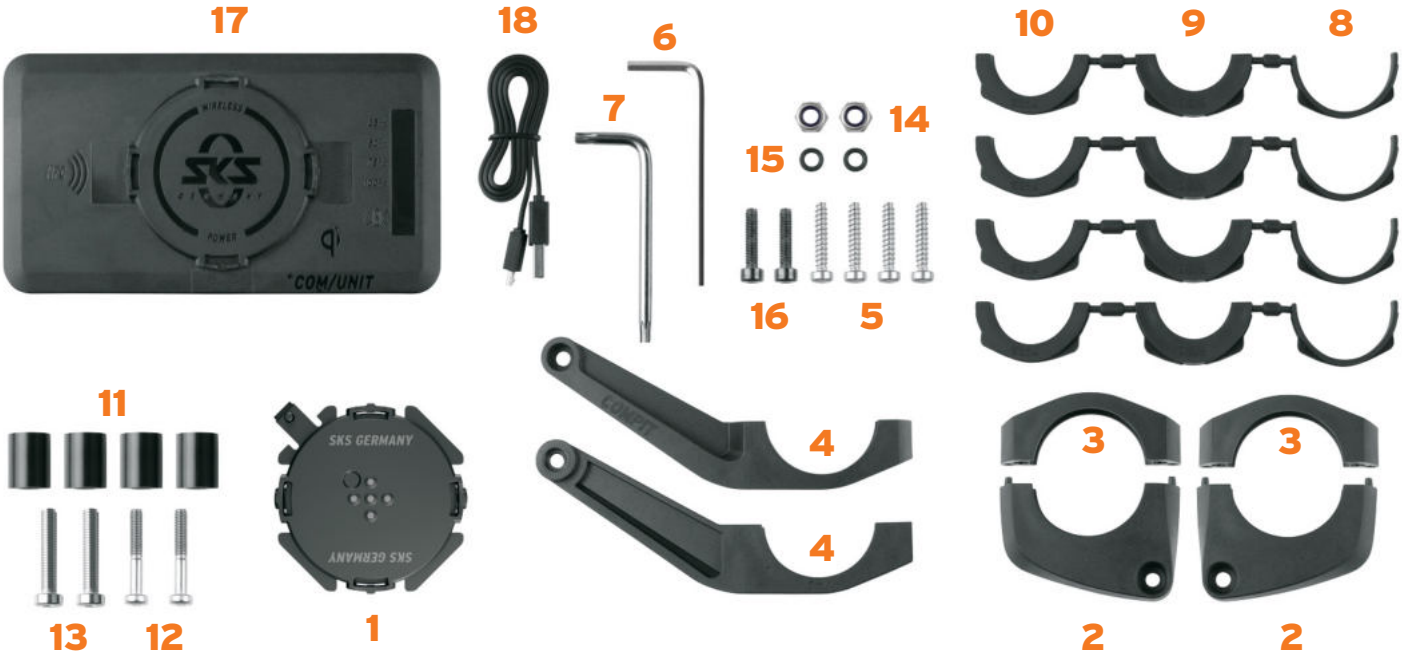

COMPIT 35 mm

No.	DESIGNATION
1	Docking station for mounting the smartphone with a cover or the +COM/UNIT
2	Side panels for the docking station 2x
3	Clamping arms for the COMPIT without an adapter 2x
4	Clamping arms for the COMPIT with an adapter for the Bosch Intuvia (R: right, L: left) 2x
5	Screws for mounting the COMPIT with clamping arms on the handlebar of the bicycle (4x20), 4x
6	3 mm Allen key
7	Torx® key Tx20

No.	DESIGNATION
8	Rubber adapters for a handlebar with a diameter of 31.8 mm, 4x
9	Rubber adapters for a handlebar with a diameter of 22.2 mm, 4x
10	Rubber adapters for a handlebar with a diameter of 25.4 mm, 4x
11	PVC spacers, 4x
12	Screws for the COMPIT spacers for the docking station; (4x25), 2x
13	Screws for the COMPIT spacers for the COM/LIGHT; (5x25), 2x
14	Self locking nuts M4, 2x for the COMPIT adapter
15	O-rings for the docking station, 2x
16	Screws for the docking station; (4x18), 2x
17	+COM/UNIT
18	+COM/UNIT charging cable
19	Klemmarme COMPIT 35 mm links
20	Klemmarme COMPIT 35 mm rechts
21	Screw M5, 2x
22	Vierkantmutter M5, 2x

Overview of the COMPIT/STEM

No.	DESIGNATION
1	COMPIT STEM

Overview of the COMPIT/STEM+

No.	DESIGNATION
1	COMPIT/STEM
2	+COM/UNIT
3	+COM/UNIT charging cable

Overview of the COM/UNIT

No.	DESIGNATION
1	+COM/UNIT
2	+COM/UNIT charging cable

Mounting options for the COMPIT

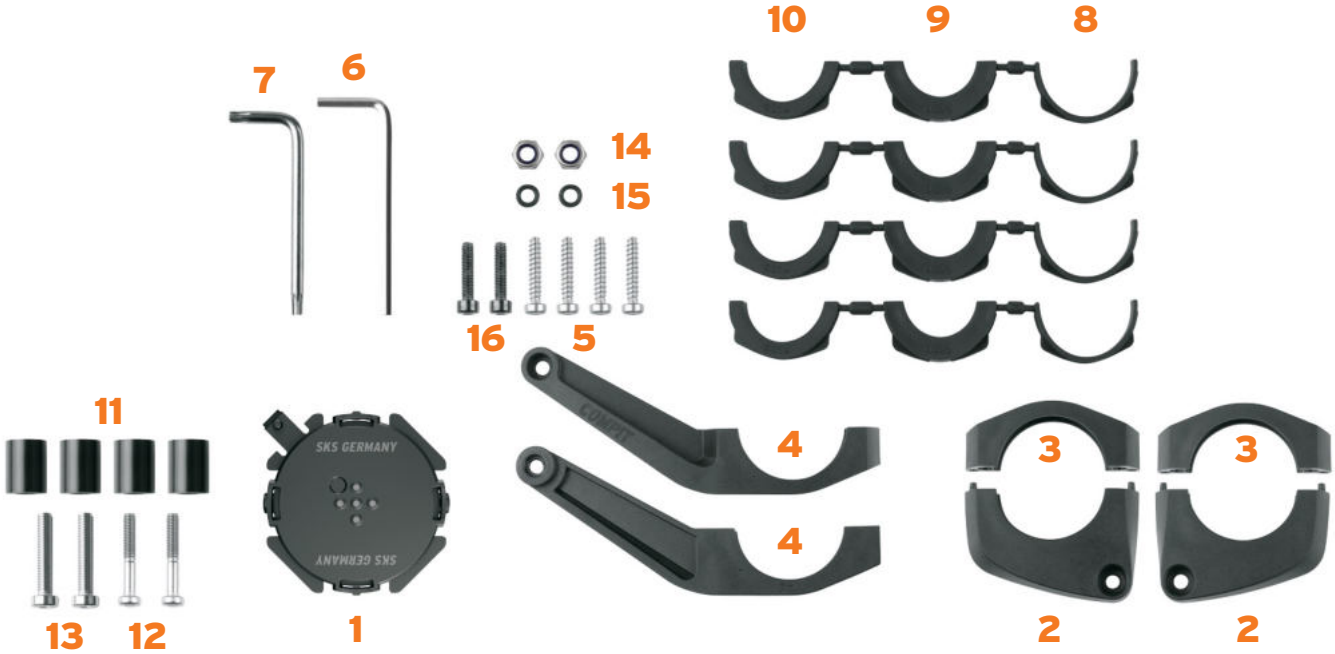

COMPIT 35 mm

Requirements

You can mount the COMPIT on a bicycle if your bike meets the following requirements:

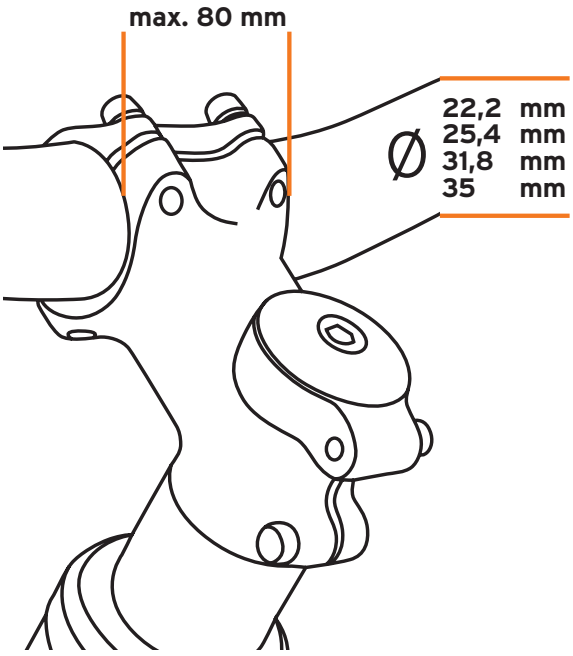

Designation	Explanation
B	A maximum stem width of 80 mm. If the stem width is > 49mm, please use the COMPIT spacers (see page 14)
Ø	Handlebar diameter: 22.2 mm 25.4 mm 31.8 mm

Mounting the adapter plate to handlebar 31.8 mm

Required:

1 Docking station for mounting the smartphone with a cover or the +COM/UNIT 1x

2 Side panels for the docking station and **3** clamping arms for the COMPIT without an adapter or **4** clamping arms for the COMPIT with an adapter (Bosch Intuvia) (2x each)

ALWAYS

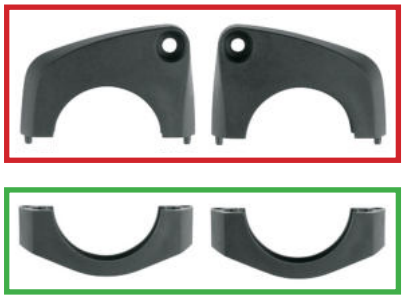

OR

14 Self-locking nuts M4, 2x

15 O-rings for the docking station

16 Screws for the docking station

6 Allen key, 3 mm

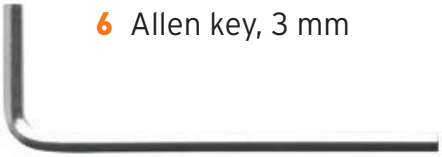

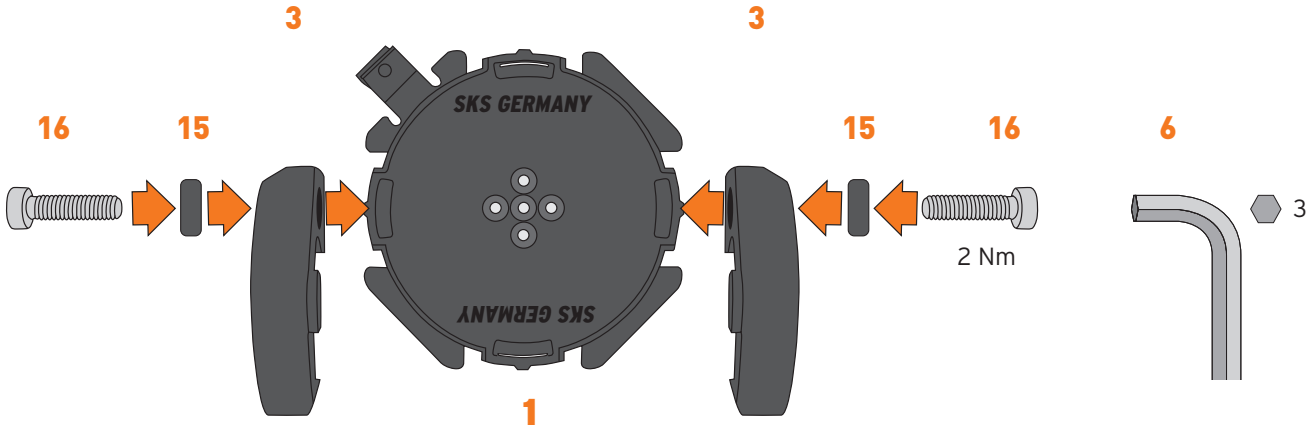

Mounting the COMPIT

Proceed as follows to mount the COMPIT/E on the handlebar of your bike:

- Choose the rubber adapters that are suitable for the handlebar of your bike.
- Insert the appropriate rubber adapters (1) into the clamping arms in the direction of the arrows as shown below.

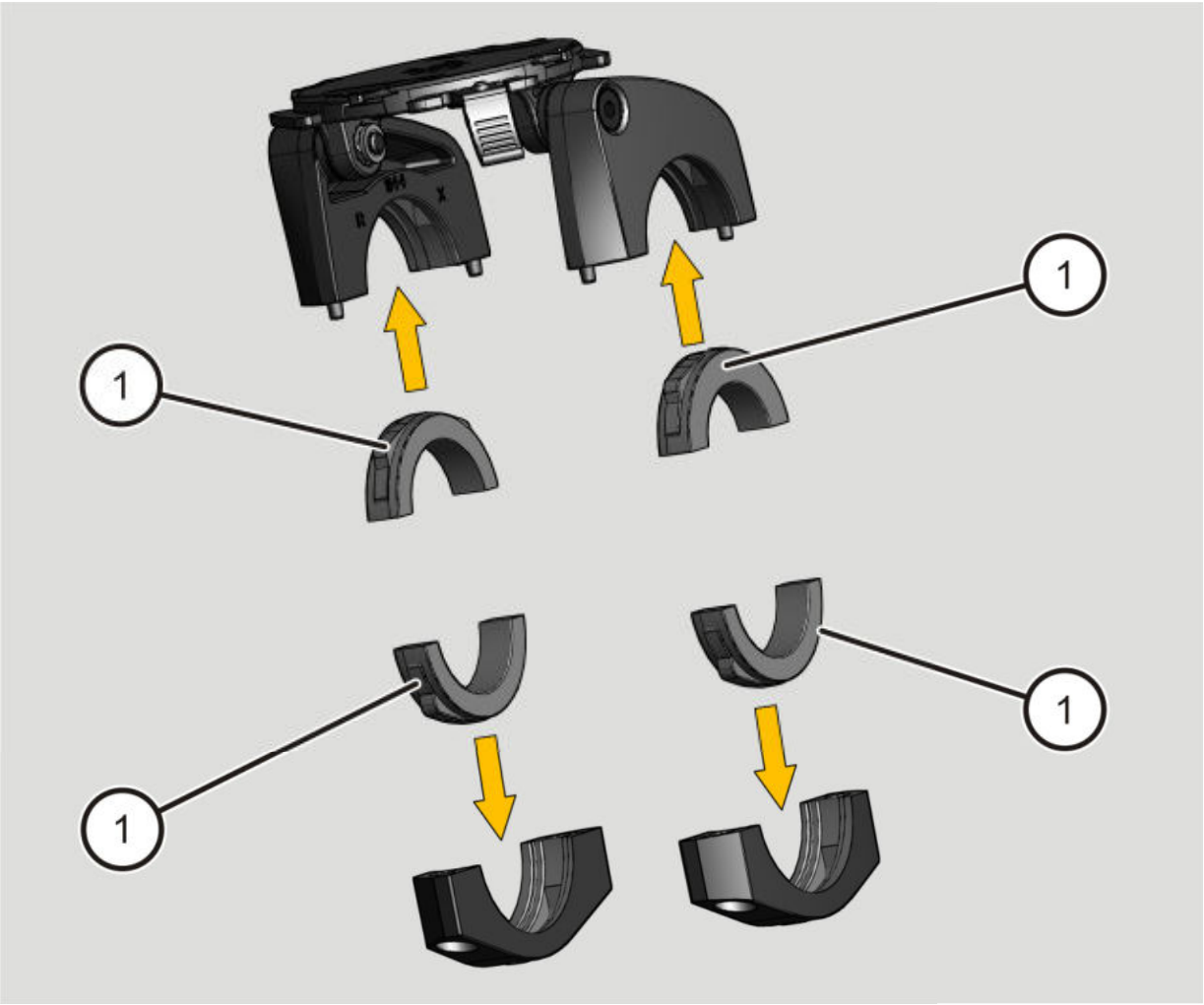

➤ Mount the COMPIT **1** with the clamping arms **3** on the handlebar of the bike.

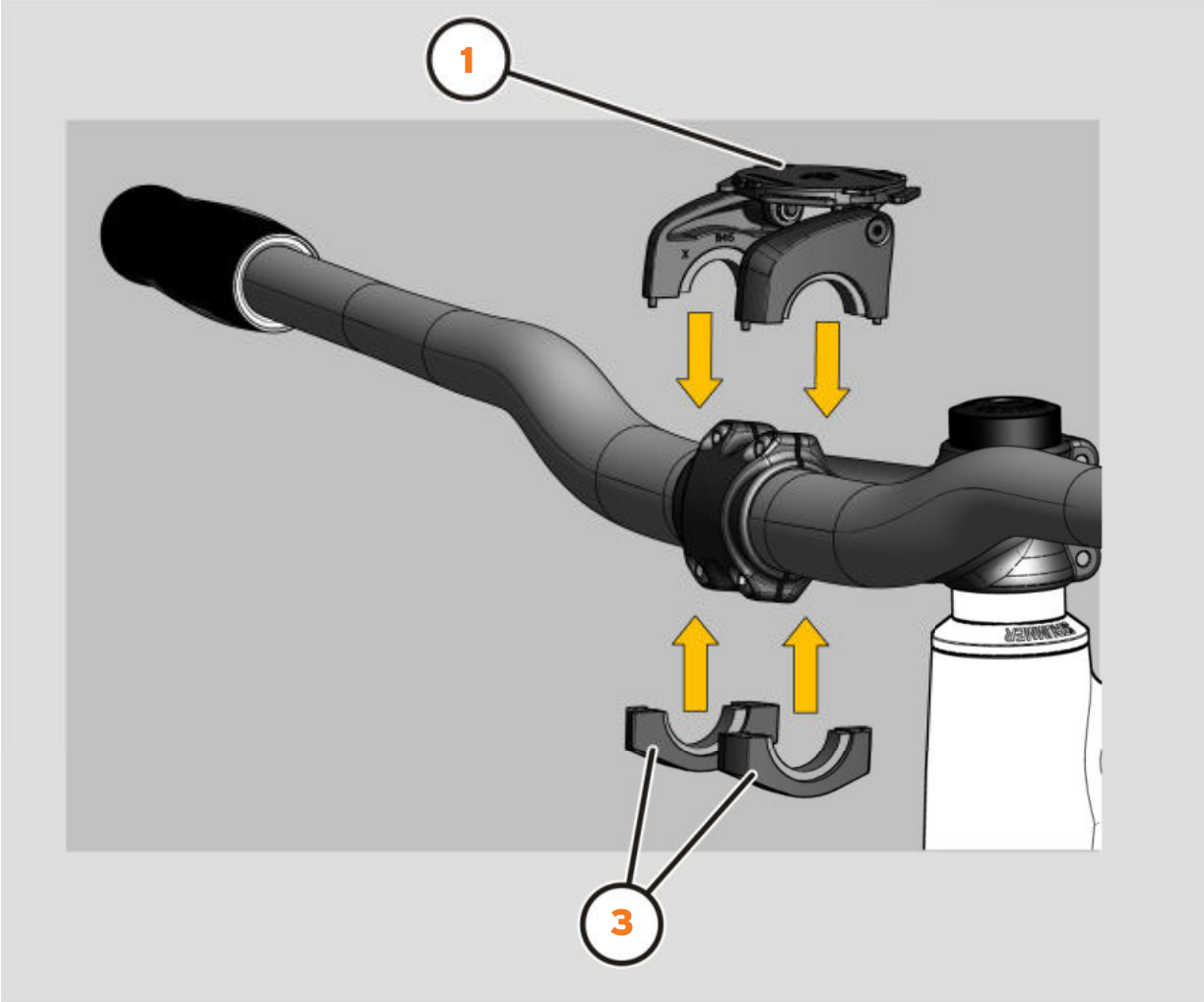

CAUTION

If the screws are not tightened evenly when mounting the COMPIT on the bike, the COMPIT may come loose from the bike and cause injuries.

➤ When mounting the COMPIT, tighten the screws evenly, alternating between them.

➤ Mount the COMPIT on the handlebar of the bike with a torque wrench. Tighten the screws **5** evenly (alternating between them) using the torque (2 Nm) indicated on the clamping arms.
ATTENTION! Bosch Intuvia only 1 Nm!

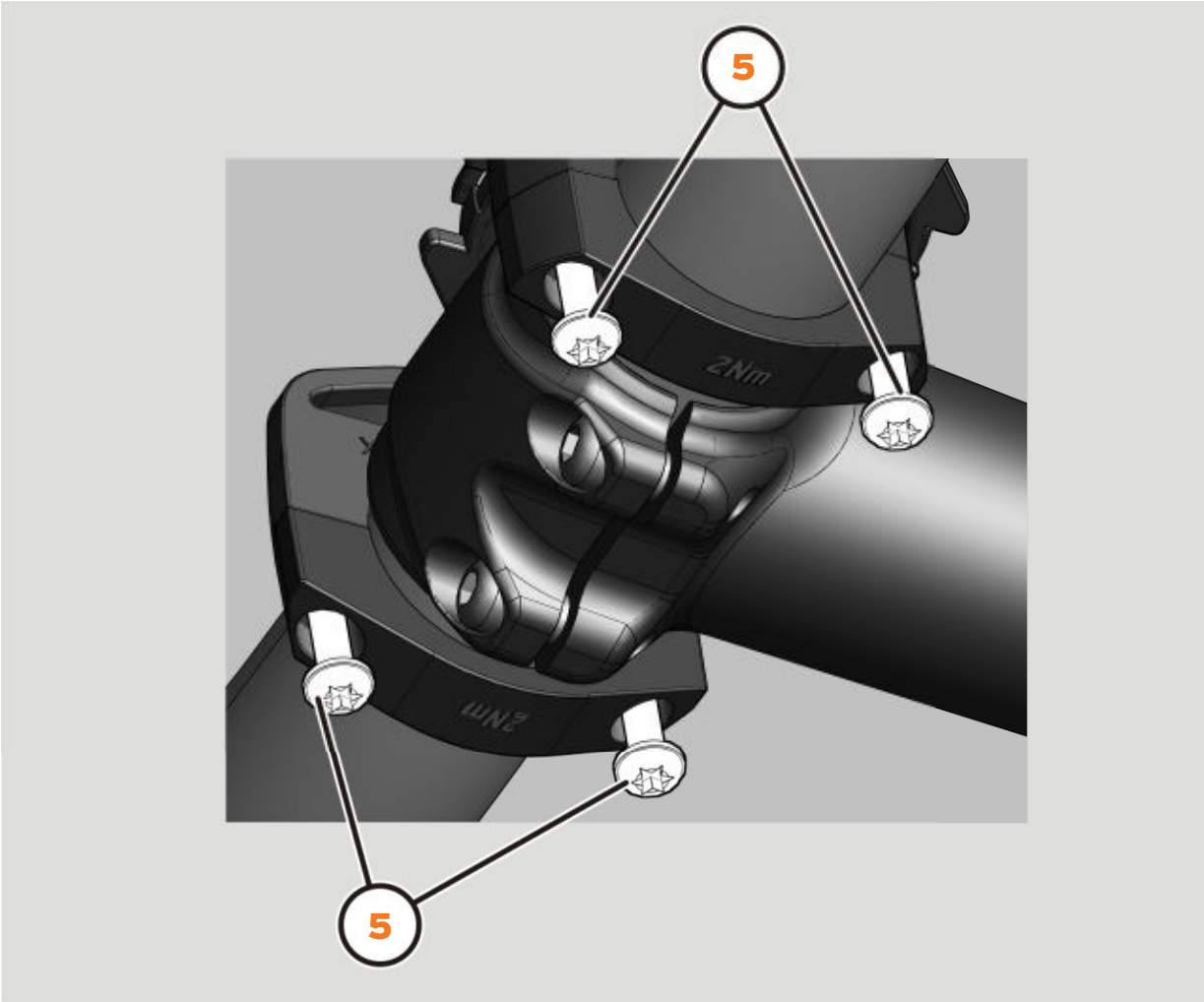

Proceed as follows to remove the COMPIT from the handlebar of the bike:

➤ Loosen the screws.

➤ Remove the COMPIT with the clamping arms from the handlebar of the bicycle.

COMPIT+

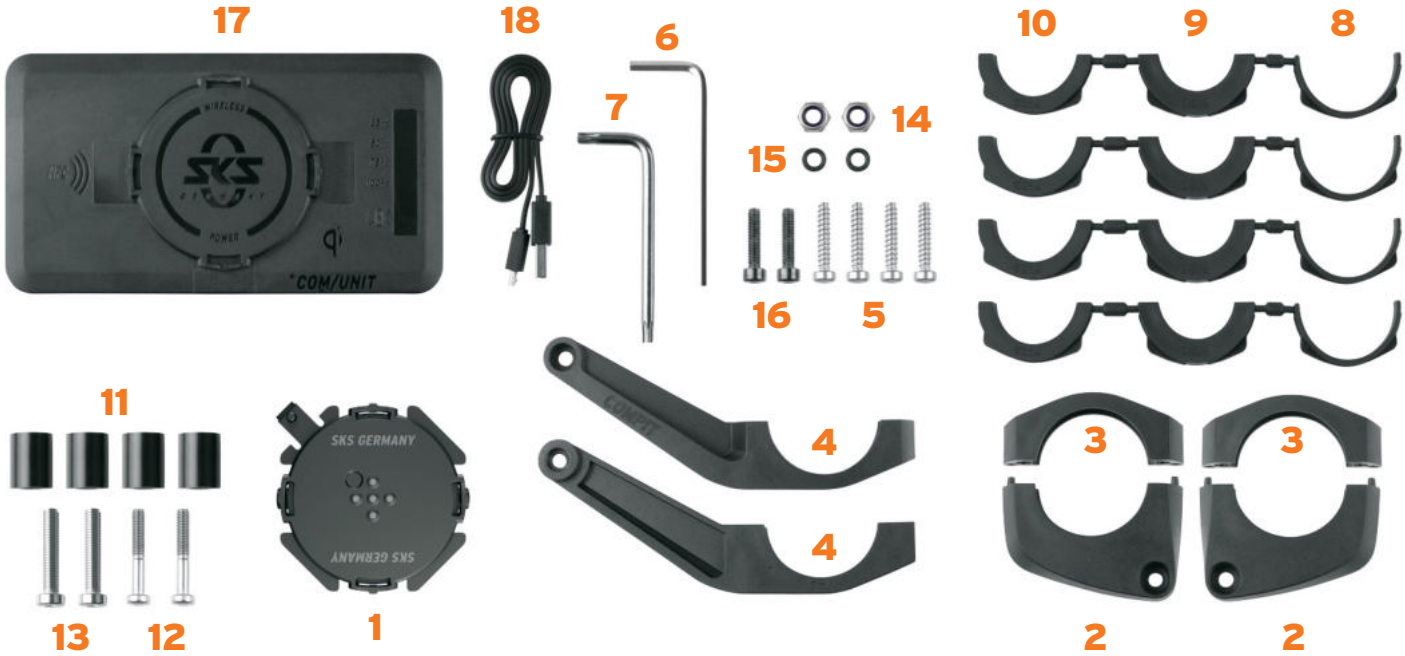

The COMPIT+ is mounted in the same way as the COMPIT.
The COM/UNIT is mounted with a twist here between the smartphone and the bayonet mount.

Mounting the COMPIT spacers

Required:
11 PVC spacers, 4x
12 Screws for the COMPIT spacers for the docking station; (4x25), 2x

For on-board computers and ahead stems with a maximum width of 80 mm.

Pre-mounting of the side panels on the handlebar

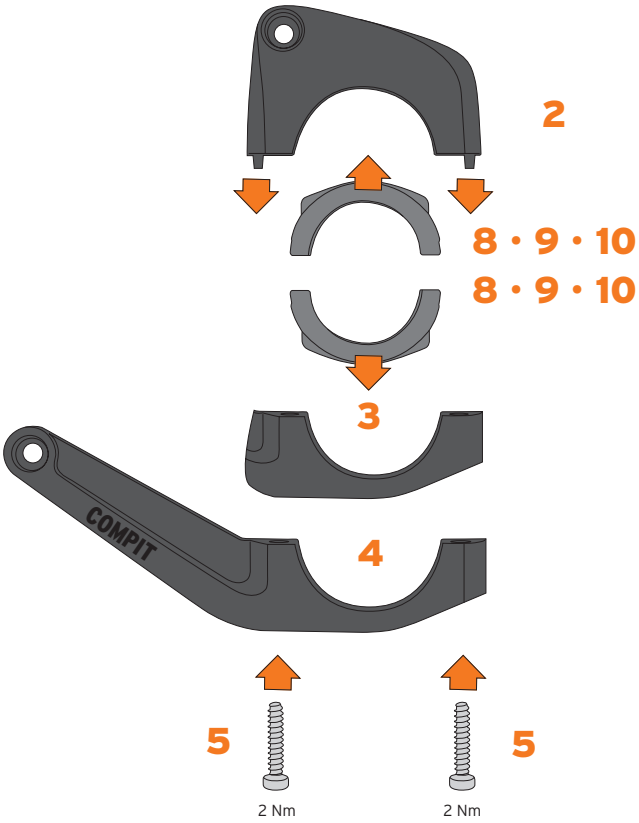

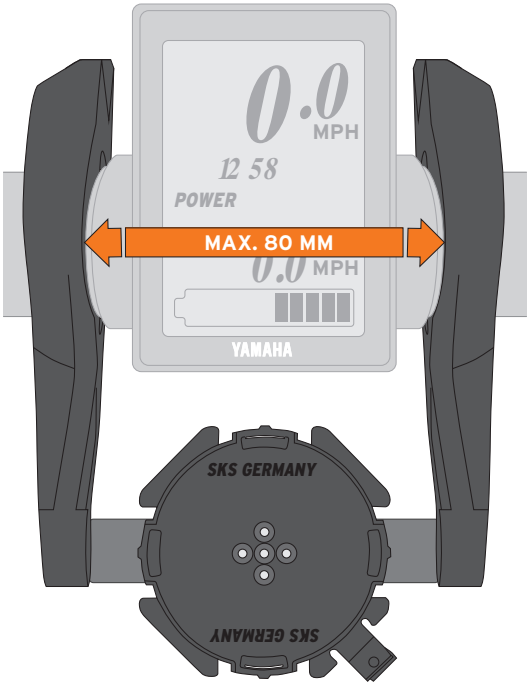

Suitable for

YAMAHA
SHIMANO
BOSCH

Mounting the COMPIT spacers

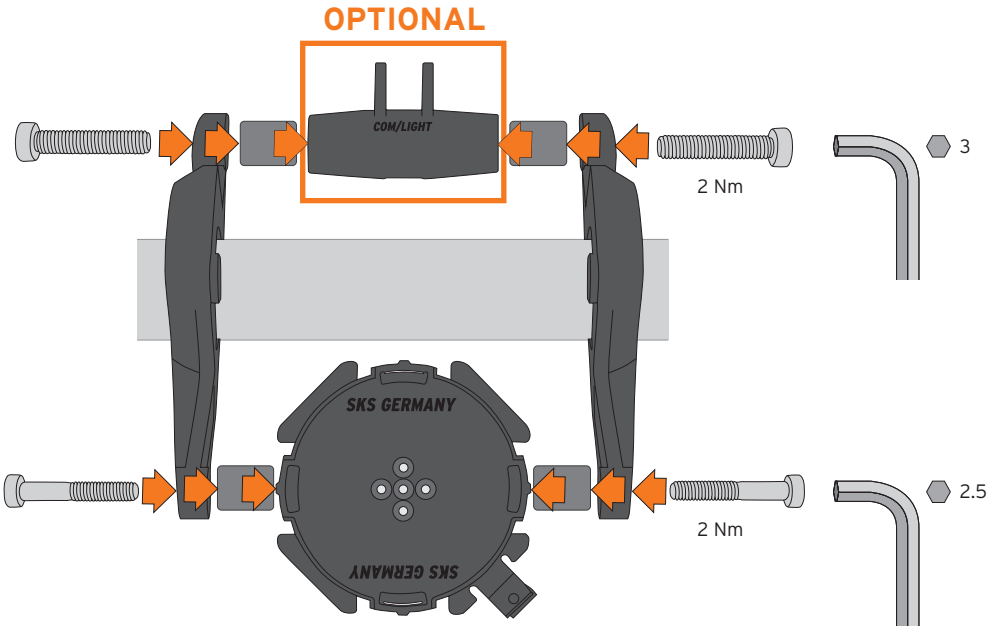

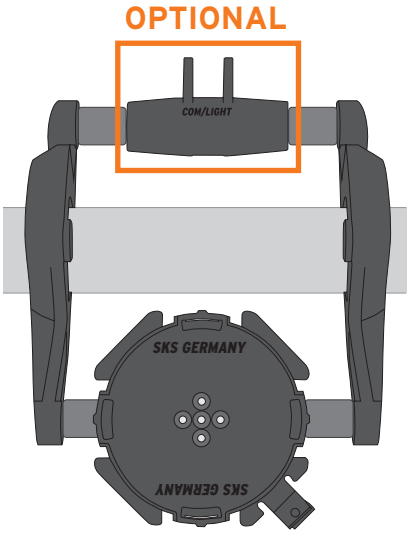

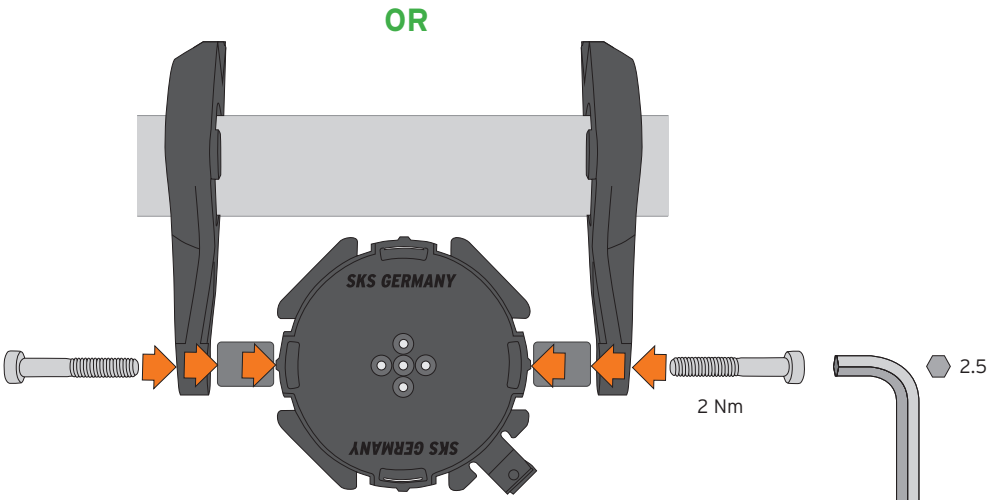

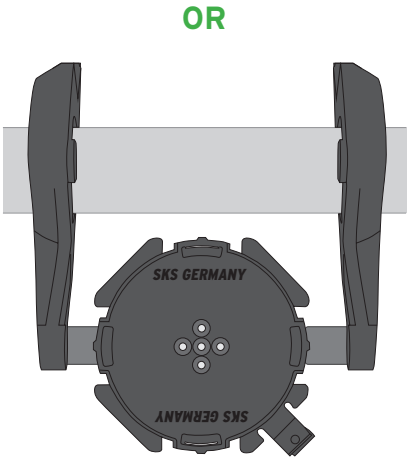

➤ Also compatible with COMPIT 35 mm clamp.

COMPIT/STEM

Required:

Requirement
Headset ø 1 1/8 inches
For ahead stems

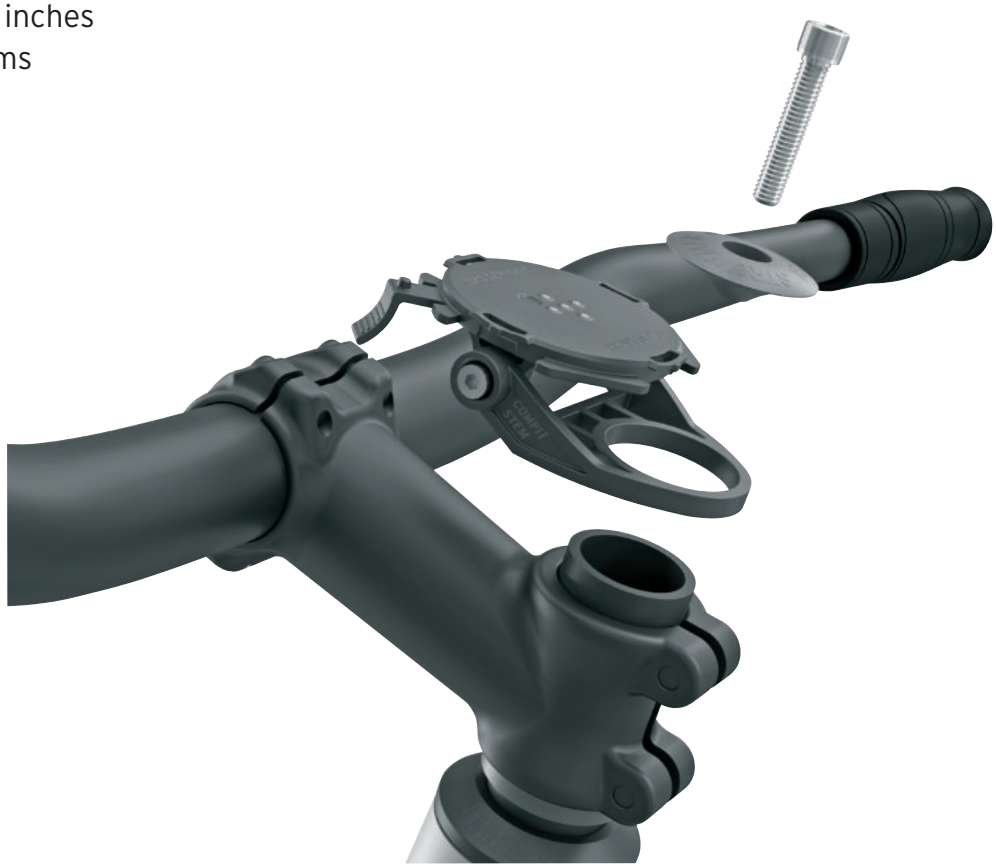

- Remove the headset cap
- If necessary, replace a spacer with the COMPIT STEM
- Screw the headset cap back in place. Observe the specified torque valves.

COMPIT/STEM+

Required:

The COMPIT STEM+ is mounted in the same way as the COMPIT STEM. The +COM/UNIT is mounted with a twist here between the smartphone and the bayonet mount.

COMPIT COVER

INSTALLATION

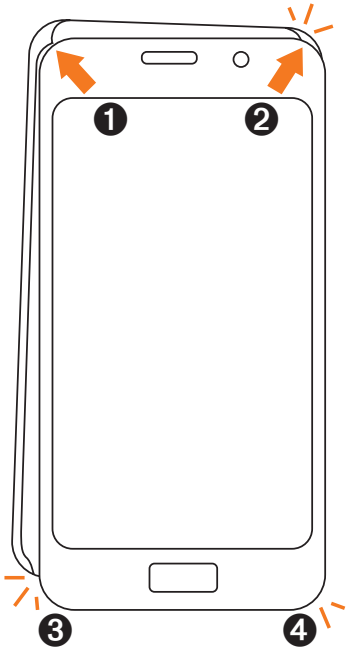

REMOVAL

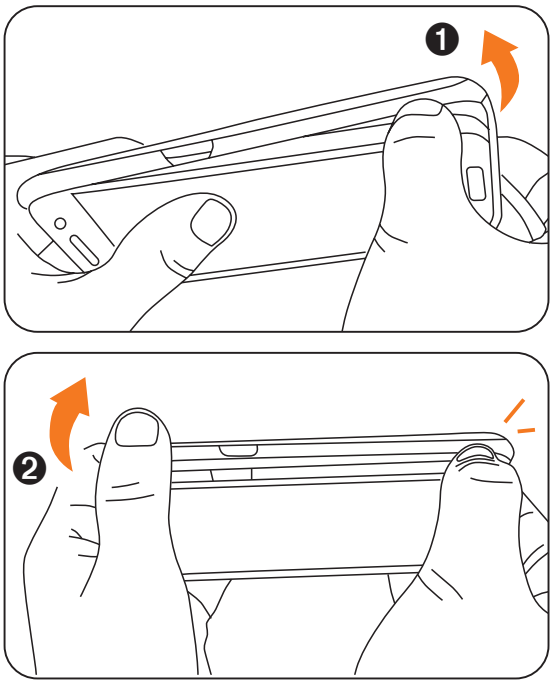

COMPIT UNIVERSAL COVER

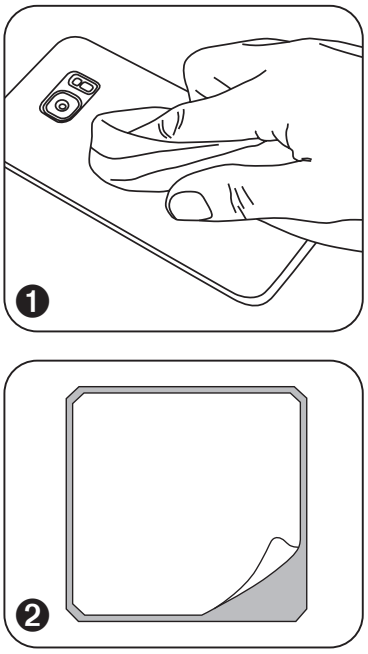

INSTALLATION

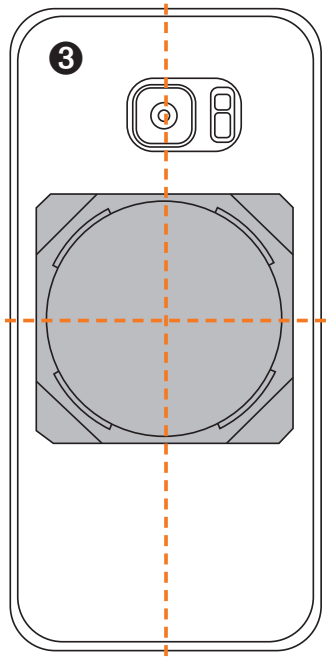

NO

SILICONE, TPU COVER

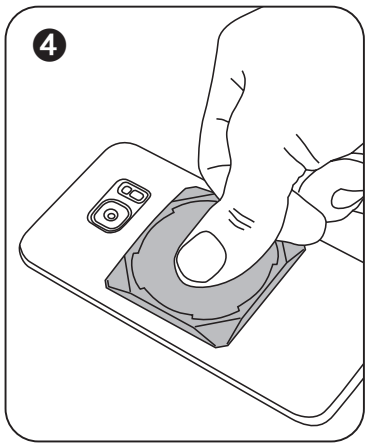

Task and function

COMPIT
The COMPIT is used for mounting a smartphone on the handlebar of a bike. To do this, the mobile phone must be equipped with a special COMPIT COVER. The docking station allows the smartphone to be mounted horizontally and vertically with a single twist. The tilt adjustment allows the mobile phone to be moved to the desired position. The COM/LIGHT adapter for mounting the front lamp (lamp not included) and the COM/CAM adapter (not included) for mounting a camera can also be affixed to the COMPIT.

COMPIT+ and +COM/UNIT
The +COM/UNIT is additionally included in the scope of delivery for the COMPIT+. The +COM/UNIT is used to charge and connect the smartphone while cycling. This can be affixed to the COMPIT. Smartphones that have a wireless charging function are charged by affixing the smartphone to the Qi docking station. Smartphones without a Qi charging function can be charged with an optional USB cable. It is affixed using a cover not included in the scope of delivery. The tilt adjustment allows the +COM/ UNIT to be moved to the desired position. It has an NFC (NEAR FIELD COMMUNICATION) chip that can be equipped with various functions. The +COM/UNIT can be charged with the USB cable included in the scope of delivery.

COMPIT STEM
The COMPIT STEM mobile phone holder consists of a bayonet mount and the stem mounting. The phone holder is mounted below the ahead cap on the handlebar stem. The holder can be mounted in two directions, so that the mobile phone does not touch your knees even when riding out of the saddle.

COMPIT STEM+
The COMPIT STEM+ combines the +COM/UNIT with the COMPIT STEM system.

COMPIT SPACER
The COMPIT SPACER accessories allow for stem widths or on-board computers up to a maximum width of 80 mm to be covered. These include on-board computers from Bosch, Yamaha and Shimano.

Technical data

+COM/UNIT	
Dimensions	130 x 70 x 21.5 mm
Weight	~188 g
USB input	DC 5 V/2 A
USB output	DC 5 V/2 A
Housing input*	DC 5-15 V/2 A
Wireless transmission power	5 W
Wireless efficiency	>70%
Operating frequency	110 KHz-205 KHz
Wireless output	DC 5 V/1 A
Battery type	Lithium polymer battery
Battery capacity	5000 mAh
NFC chip	NTAG 216, 924 bytes
Protection rating	IP54
Operating temperature	-15 ~ 60 °C
Charging temperature	0 ~ 45 °C

* Only in combination with the COMPIT/E

LED status display

+COM/UNIT	LED	STATUS	DISPLAY
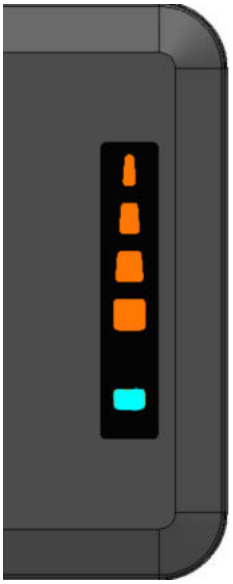	Battery display	4 LEDs flash orange one after the other	+COM/UNIT is charged
		1 LED lights up	0%-25% battery capacity
		2 LEDs light up	25%-50% battery capacity
		3 LEDs light up	50%-75% battery capacity
		4 LEDs light up	75%-100% battery capacity
	Indicator for wireless charging	Blue	Standby or charging process complete
		Blue, flashing approx. 1x per second	Charging process
		Blue, fast flashing approx. 5x per second	Charging error

Unpacking and checking the scope of delivery

- Remove the product from the packaging.
- Keep the original packaging in case you need to return the product to customer services.
- Check the scope of delivery to ensure it is correct and complete (refer to page 9 onwards).
- Check all parts to ensure that they are undamaged.
- If there are any deviations, please contact the manufacturer or dealer immediately.

Mounting and removing the COMPIT from the handlebar of the bicycle

Mounting and removing the smartphone from the COMPIT

It is possible to use the product with the COVERS, COVER ADAPTER and COM/SMARTBAG.
Proceed as follows to mount your smartphone on the COMPIT:

- Insert your smartphone into the corresponding cover according to the relevant instructions.
- Place your smartphone on the COMPIT (as shown in 1 or 2) and turn it (about 45°) either to the right or left above the docking station until you hear it click into place.

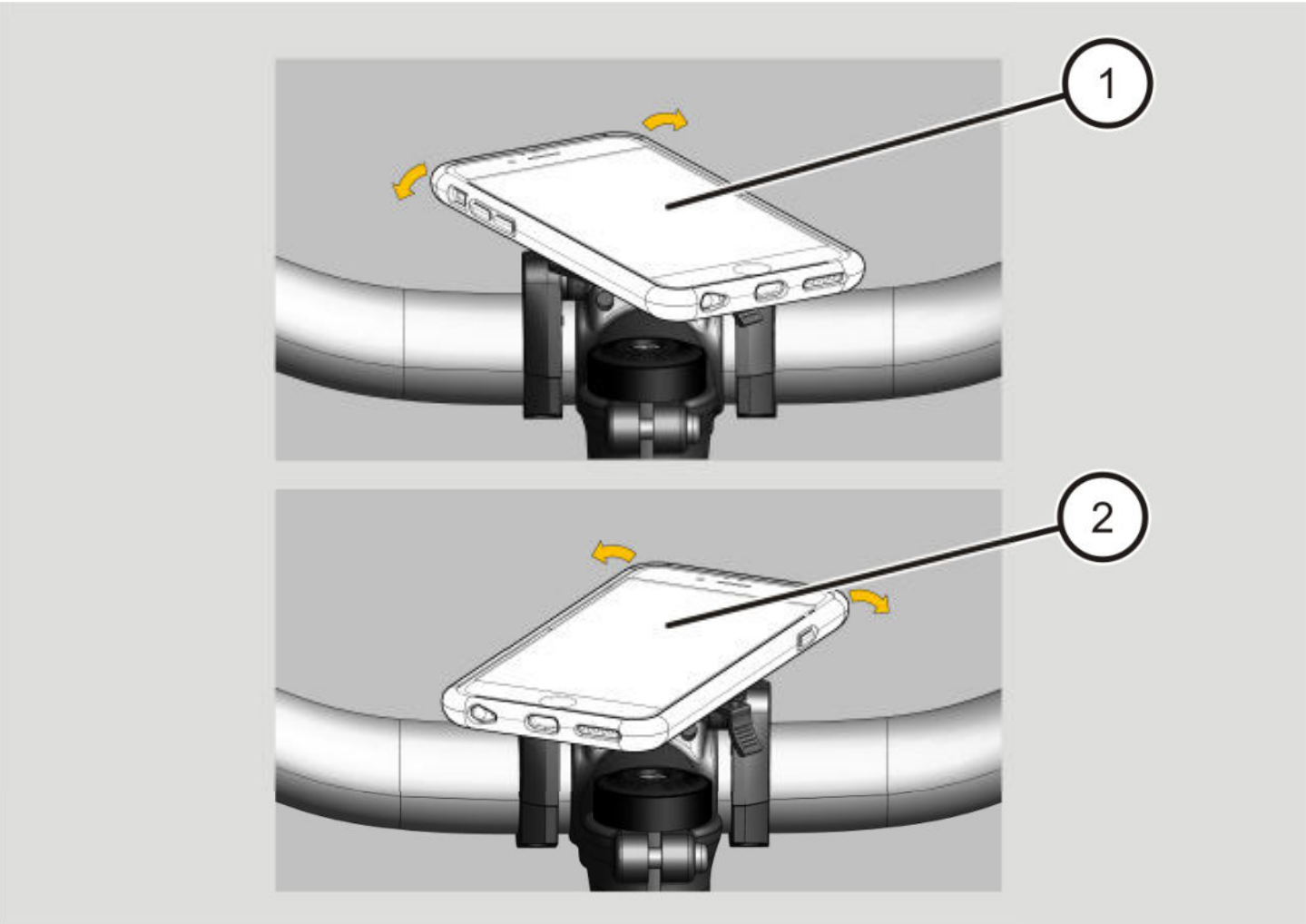

Your smartphone is mounted vertically (3) or horizontally (4) depending on how you turn it.
The safety lever (5) is locked.

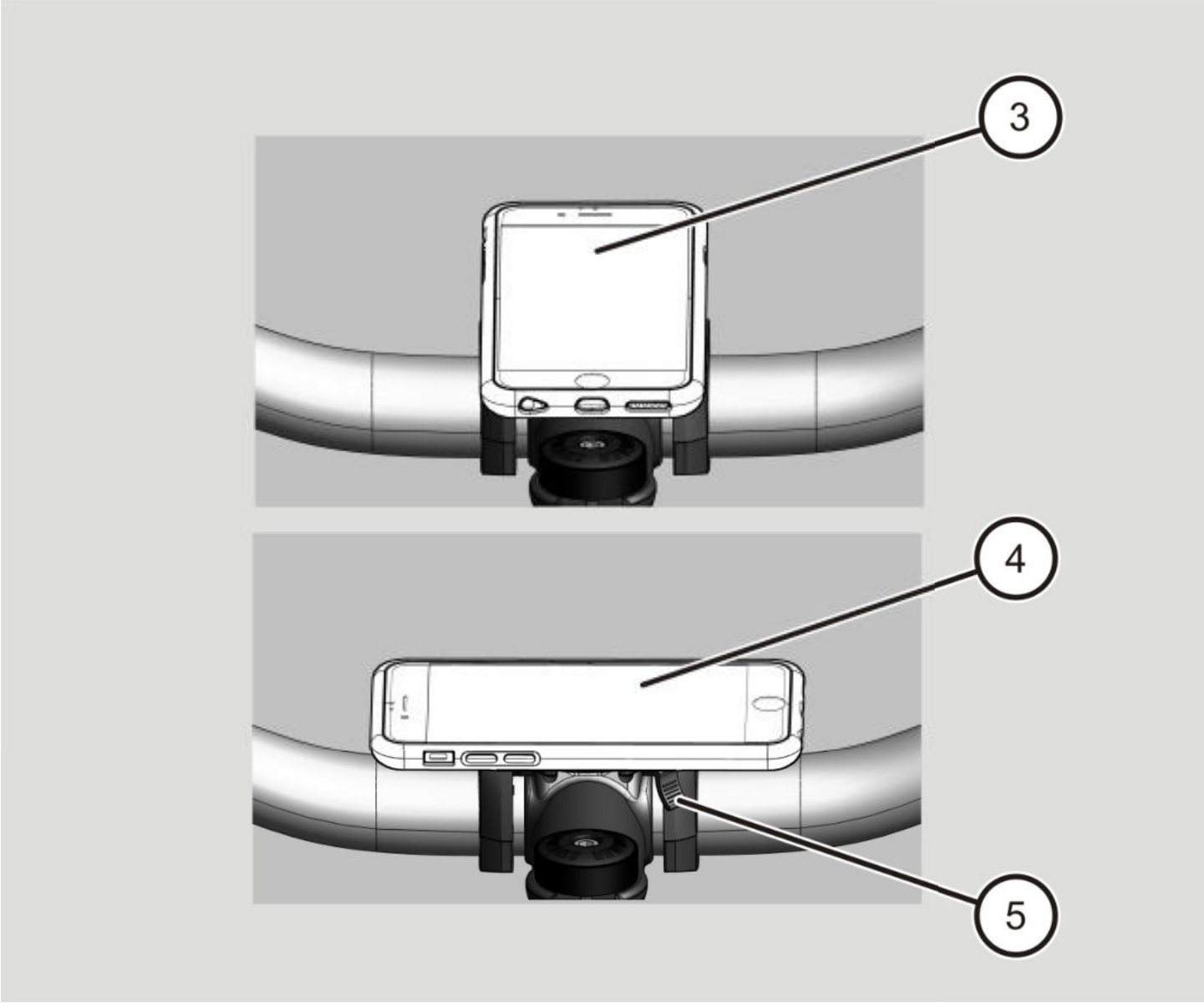

Proceed as follows to remove your smartphone from the COMPIT:

- Push the safety lever (5) downwards.
- Remove your smartphone from the COMPIT by turning it (about 45°) away from the docking station.

Adjusting the tilt

You can move your smartphone to the desired position by adjusting the tilt on the COMPIT. Proceed as follows to adjust the tilt:

- Press the smartphone (1) on the COMPIT downwards or upwards until you have reached the desired position.
- Tighten the levelling screw (2) to fix the desired tilt adjustment.

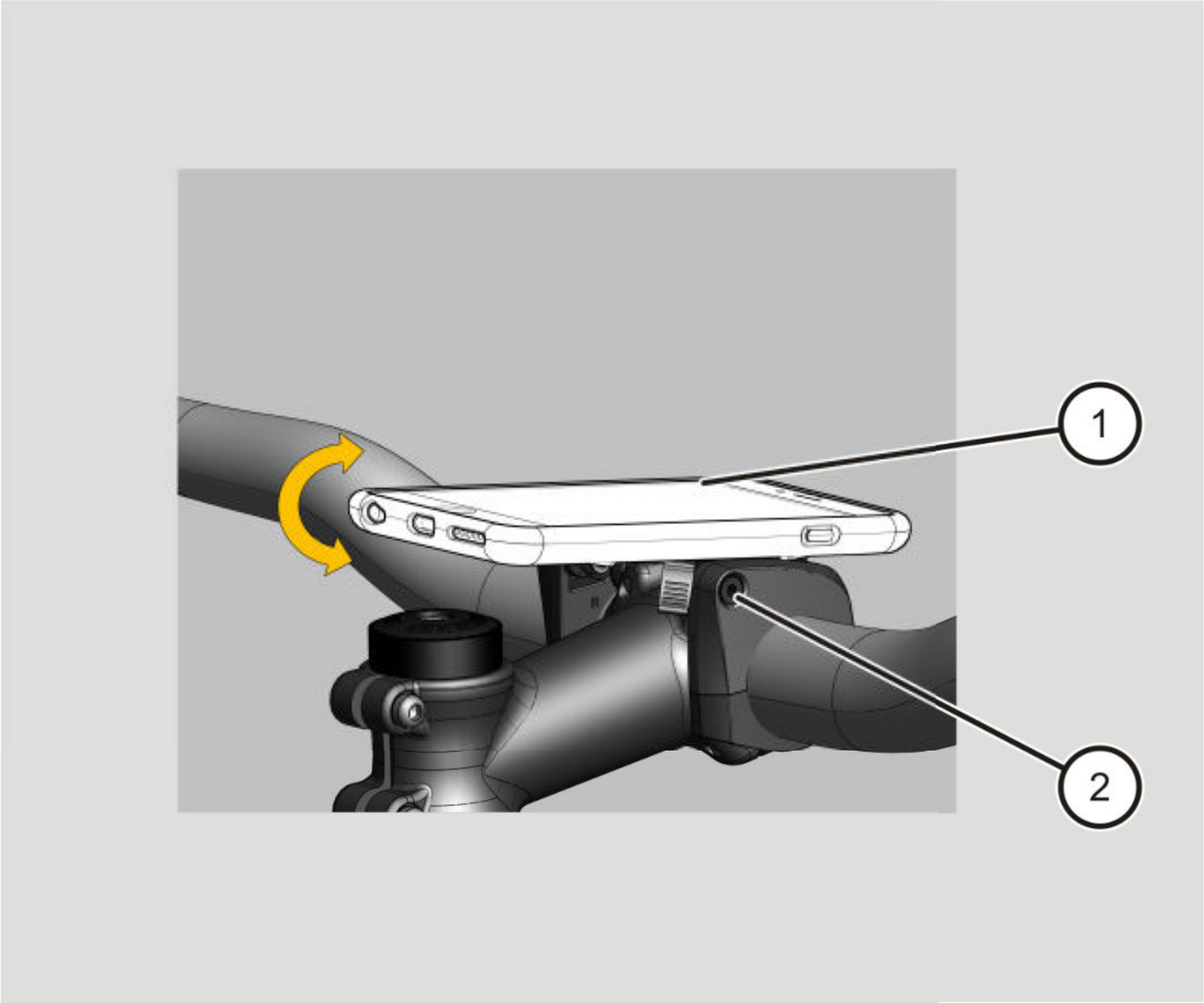

Product maintenance

Proceed as follows to maintain the product:

➤ If necessary, clean the exterior of the product with a damp cloth.

Accessories

Designation	Order number
Cover for the iPhone 6/7/8	11538
Cover for the iPhone 6+/7+/8+	11539
Cover for the iPhone X/ XS	11540
Cover for the iPhone XR/11	11633
Cover for the iPhone 11 Pro	11634
Cover for the iPhone 12 Mini	11638
Cover for the iPhone 12 Max/iPhone 12 Pro	11639
Cover for the iPhone 12 Pro Max	11640
Cover for the iPhone 13	11644
Cover for the iPhone 13 Max/13 Pro	11645
Cover for the iPhone 13 Pro Max	11646
Cover for the SAMSUNG S7	11576
Cover for the SAMSUNG S8	11577
Cover for the SAMSUNG S9	11578
Cover for the SAMSUNG S10	11632
Cover for the SAMSUNG S20	11635
Cover for the SAMSUNG S20 +	11636
Cover for the SAMSUNG S20 ULTRA 5G	11637
Cover for the SAMSUNG S21 5G	11641

Designation	Order number
Cover for the SAMSUNG S21+ 5G	11642
Cover for the SAMSUNG S21 ultra 5G	11643
Cover for the HUAWEI P20 PRO+	11579

Designation	Order number
Cover adapter Dimensions: 60 x 60 x 4 mm	11541

Designation	Order number
COM/SMARTBAG	11671

Designation	Order number
COM/CAM adapter	11608
COM/CAGE VELO	11545
COM/LIGHT	11582
COM/ADD bottle holder	11555

Disposal of the product

In Germany

- Dispose of the packaging according to its type.
  Use local paper, cardboard and lightweight packaging collection facilities.
- Dispose of the product and accessories separately from household waste. You can obtain information about collection points that accept used products free of charge from your local and municipal authorities.

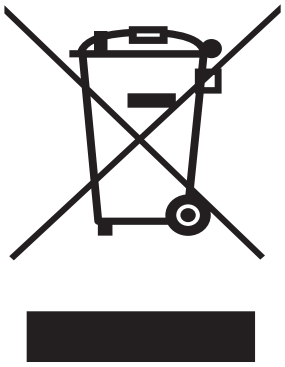

Outside Germany

- Dispose of the product and the packaging according to the regulations applicable at the place of use.

Warranty declaration

SKS metaplast Scheffer-Klute GmbH GERMANY grants a manufacturer's warranty of 2 years from the date of purchase (proof of purchase) for all parts included in the scope of delivery in accordance with the statutory regulations. This excludes wear parts – in particular the +COM/UNIT battery unit.
SKS GERMANY provides a 6-month warranty for these parts. Improper handling or incorrect use are excluded from the liability for defects.

Product returns to customer services

Proceed as follows as soon as you notice damage to the product:

➤ Send the product in its original packaging and with a precise description of the damage to the following address for repair:

SKS metaplast Scheffer-Klute GmbH
Zur Huberstushalle 4
59846 Sundern / Germany
Tel.: +49-2933-8310

SKS GERMANY

SEIT 100 JAHREN IN DER SPUR · MADE IN GERMANY · 1921 · SUNDERN ·

DAS RAD NEU ERFINDEN · SEIT 100 JAHREN · MADE IN GERMANY · 19 SKS 21

TRADITION TRIFFT FORTSCHRITT · MADE IN GERMANY ·

SKS-GERMANY.COM